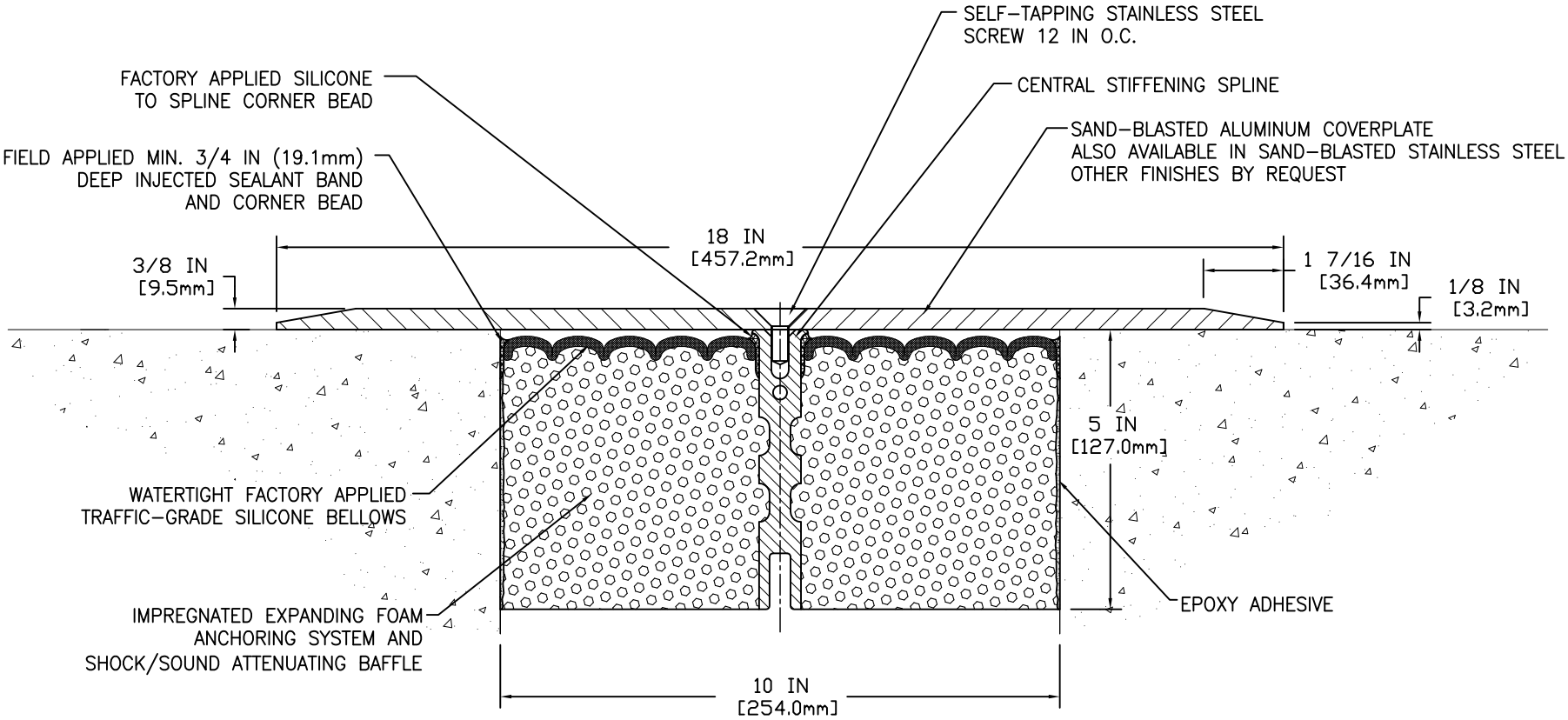

NOTE: 3/8 IN (9.5mm) COVERPLATES FOR VEHICLE AND PEDESTRIAN–TRAFFIC USE
(FOR PEDESTRIAN–TRAFFIC ONLY, USE 1/4 IN (6.4mm) COVERPLATE)

MOVEMENT: ±50%
+ 5 IN (127mm)
– 5 IN (127mm)

EMSEAL JOINT SYSTEMS LTD.

SJS – 1000 DECK TO DECK EXPANSION JOINT

THIS DOCUMENT CONTAINS INFORMATION OF A CONFIDENTIAL NATURE AND IS PROPRIETARY TO EMSEAL JOINT SYSTEMS LTD. ANY UNAUTHORIZED USE WILL BE PROSECUTED. THIS DRAWING IS PROTECTED BY COPYRIGHT, THE RIGHT TO REPRODUCE IN ANY FORM BEING THE EXCLUSIVE RIGHT OF EMSEAL JOINT SYSTEMS LTD. ANY UNAUTHORIZED REPRODUCTION WHETHER IN TWO OR THREE DIMENSIONS WILL BE PROSECUTED. © 2014 EMSEAL JOINT SYSTEMS LTD.

DRAWN BY:	DATE:	SCALE:	SHEET
NER	2014/04/17	N.T.S.	No: 1 OF 1

PART NUMBER: SJS_10_DD_CONC_3-8_PLATE_LONG_CHAMFER