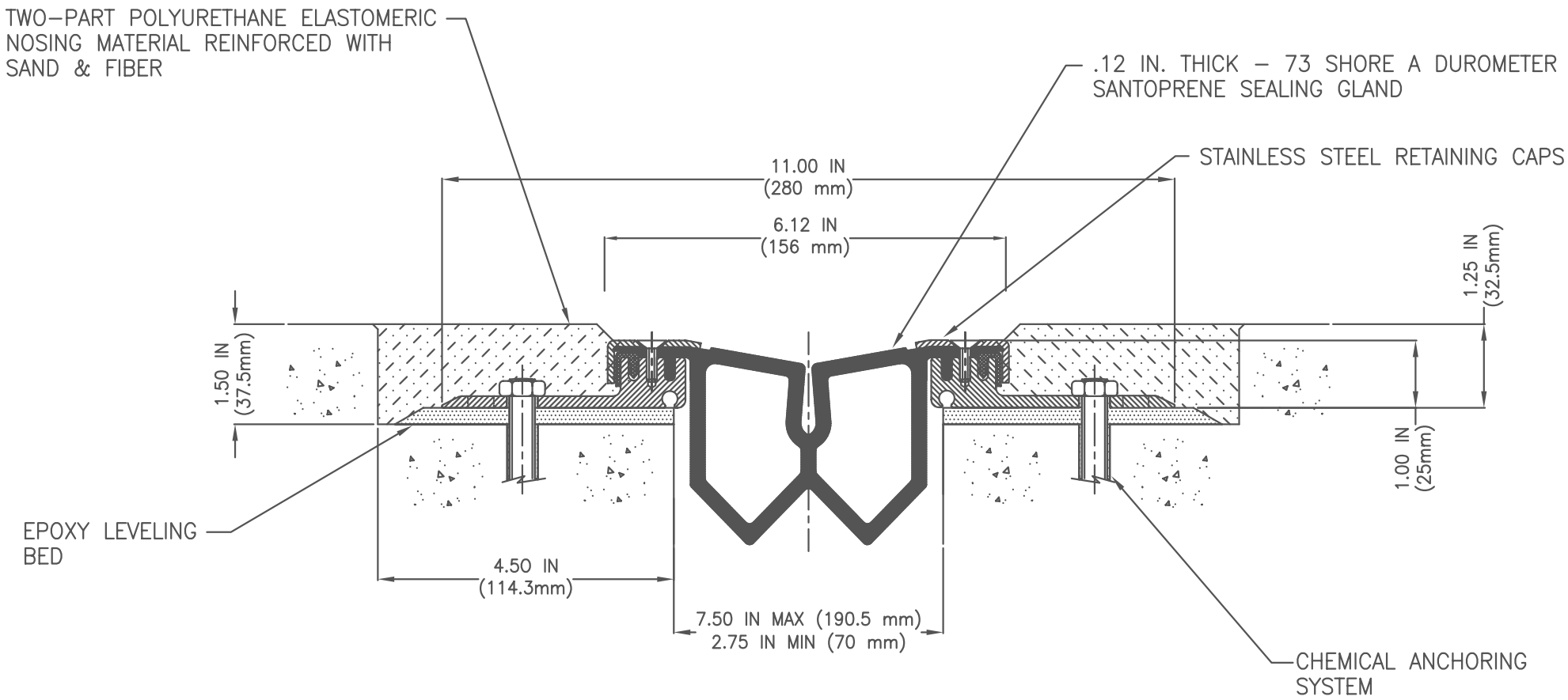

MOVEMENT: + 2.38 IN (60.5 mm)
– 2.38 IN (60.5 mm)

CD-ROM VERSION 3 FILENAME: DecktoDeck

C:\DETAILS\MIGUA\FP155\

EMSEAL JOINT SYSTEMS LTD.

FP 155/25 NI DECK-TO-DECK IN BLOCKOUT

THIS DOCUMENT CONTAINS INFORMATION OF A CONFIDENTIAL NATURE UNAVAILABLE TO THE PUBLIC AND IS PROPRIETARY TO EMSEAL CORPORATION. ANY UNAUTHORIZED USE WILL BE PROSECUTED. THIS DRAWING IS PROTECTED BY COPYRIGHT, THE RIGHT TO REPRODUCE IN ANY FORM BEING THE EXCLUSIVE RIGHT OF EMSEAL CORPORATION. ANY UNAUTHORIZED REPRODUCTION WHETHER IN TWO OR THREE DIMENSIONS WILL BE PROSECUTED.

DRAWN BY: RJC	DATE: 1/27/00	SCALE: N.T.S.	SHEET No:
PART NUMBER: 25\001-0-00-00			